TRX6000-POWER(1/1)

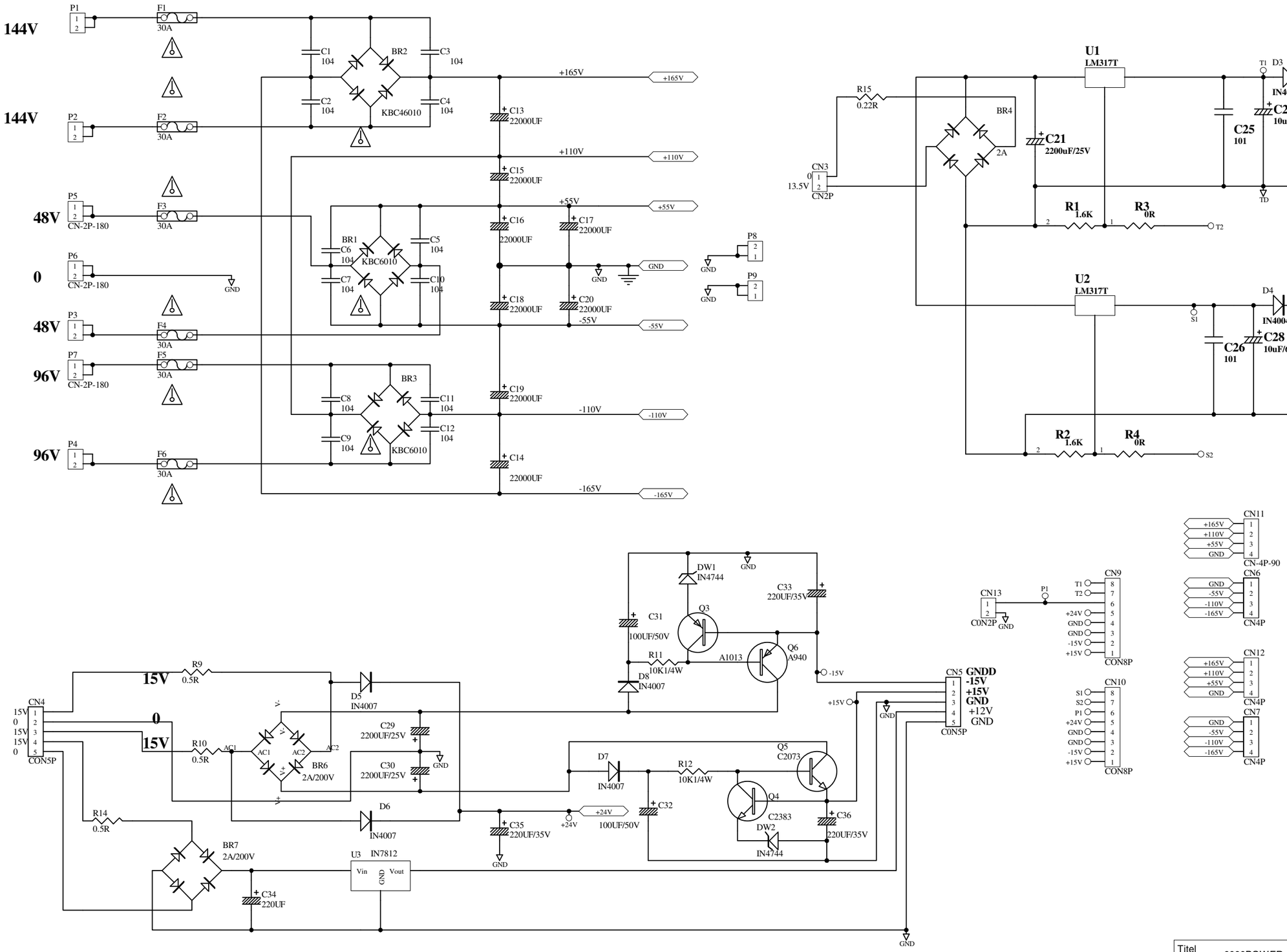

Titel	6000POWER	
Size A4	Model No: TRX6000	Revision VER070514
Date: 12-Mar-2008	Sheet 1 of 1	
File: HB02507 TRX6000POWER.Sch	Drawn By: XiaoPingHuang	